HIWIN®
Motion Control and System Technology

Delta Robot Controller

User Manual

Original Instruction

www.hiwin.tw

HIWIN®
Motion Control and System Technology

INDUSTRIE 4.0 Best Partner

Multi Axis Robot

Pick-and-place / Assembly /
Array and packaging / Semiconductor /
Electro-Optical industry /
Automotive industry / Food industry

- Articulated Robot
- Delta Robot
- SCARA Robot
- Wafer Robot
- Electric Gripper
- Integrated Electric Gripper
- Rotary Joint

Single Axis Robot

Precision / Semiconductor /
Medical / FPD

- KK, SK
- KS, KA
- KU, KE, KC

Direct Drive Rotary Table

Aerospace / Medical / Automotive industry /
Machine tools / Machinery industry

- RAB Series
- RAS Series
- RCV Series
- RCH Series

Ballscrew

Precision Ground / Rolled

- Super S series
- Super T series
- Mini Roller
- Ecological & Economical lubrication Module E2
- Rotating Nut (R1)
- Energy-Saving & Thermal-Controlling (C1)
- Heavy Load Series (RD)
- Ball Spline

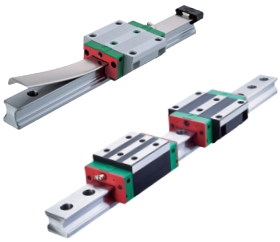

Linear Guideway

Automation / Semiconductor / Medical

- Ball Type--HG, EG, WE, MG, CG
- Quiet Type--QH, QE, QW, QR
- Other--RG, E2, PG, SE, RC

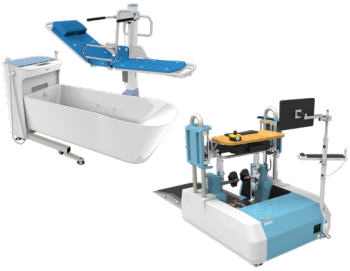

Medical Equipment

Hospital / Rehabilitation centers /
Nursing homes

- Robotic Gait Training System
- Hygiene System
- Robotic Endoscope Holder

Bearing

Machine tools / Robot

- Crossed Roller Bearings
- Ball Screw Bearings
- Linear Bearing
- Support Unit

AC Servo Motor & Drive

Semiconductor / Packaging machine
/SMT / Food industry / LCD

- Drives-D1, D1-N, D2T
- Motors-50W~2000W

Driven Tool Holders

All kinds of turret

- VDI Systems
  Radial Series, Axial Series, MT
- BMT Systems
  DS, NM, GW, FO, MT, OM, MS

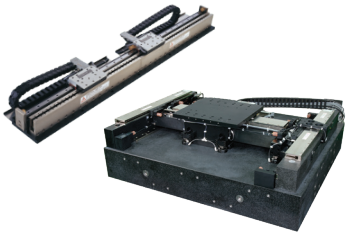

Linear Motor

Automated transport / AOI application
/ Precision / Semiconductor

- Iron-core Linear Motor
- Coreless Linear Motor
- Linear Turbo Motor LMT
- Planar Servo Motor
- Air Bearing Platform
- X-Y Stage
- Gantry Systems

Torque Motor (Direct Drive Motor)

Inspection / Testing equipment /
Machine tools / Robot

- Rotary Tables-TMS,TMY,TMN
- TMRW Series
- TMRI Series

Safety and Notice

1. Safety Information

- Safety Responsibility and Effect
  - ⦿ This safety information neither contains how to design, install and run a complete workstation or production line, nor ensure the whole system safety. In order to guarantee personal safety, all machines must be designed and installed according to the industrial safety regulations.
  - ⦿ Users of *HIWIN* robot have the responsibility to design and install the safety devices in compliance with the industrial safety regulations, used to protect personal safety.
  - ⦿ In compliance with the safety information on industrial robot described in this manual can't guarantee that *HIWIN* robot will not occur any safety accident.
- Safety Operation Principle
  - ⦿ The robot also provides an interface for external safety device, which can receive external signals to control the robot.
  - ⦿ Emergency Stop button (on Teach Pendant or from external emergency stop switch) must be pressed before turning off the power, and then disconnect the power switch.
  - ⦿ After turning off the power switch, the operator must wait for green indicator (PC indicator) to disappear then remove or turn off the main power.
  - ⦿ After the controller is turned on, please disconnect the green power switch on the controller if you need to it turn off. Don't directly disconnect the power.
  - ⦿ After the power is disconnected, you must wait for blue indictor (PC indicator) to disappear then remove or turn off the main power.
  - ⦿ After turning off the power switch, do not restart it immediately. Please wait for 30 seconds to restart.

2. Description Related to Safety

I. Safety Symbol

⦿ Please carefully read and make sure to follow this manual before operating the robot. The following are the safety symbol used in this manual.

Symbol	Description
DANGER	Failure to follow the description of this symbol will cause serious personal injury. Please make sure to follow those requirements to ensure safety.

WARNING	Failure to follow the description of this symbol will cause personal injury or product damage. In order to guarantee the safe use of this product, please follow this regulation strictly.
CAUTION	Failure to follow the description of this symbol will result in improper operation. In order to guarantee the safe use of this product, please make sure to follow this regulation.

II. Safety Grade

⊙ The following symbols are frequently used for safety notice. Please carefully read the following notices and always follow them before operating the robot.

DANGER	❖ Do not operate the machine in potentially explosive environment. ❖ Do not store the machine in the environment with corrosive gas, with flammable gas or close to the flammable object. ❖ Do not operate the machine in the environment with moisture, water or grease. ❖ Do not operate the machine at the place where vibration or the strong impact occurs. ❖ Do not immerse the electric wires into grease or water. ❖ Do not connect or operate the machine with wet hands. ❖ Please ensure the controller is grounded. ❖ Keep hands away from the inner part of the controller while it is connecting to the power or during operating. ❖ Do not touch the heat sink, regenerative resistance, the power supply or the computer inside the controller. While it is operating due to its high temperature. ❖ Be sure power is disconnected prior to move, connect, check and maintain the controller, and ensure to operate under the condition of no electrical shock risk. ❖ The emergency stop switch must be installed in an appropriate location where it can be operated easily. When

	the robot acts abnormally, it could immediately stop the robot from causing serious safety accident. ❖ Do not open the controller cover without permission. If there's any questions, please contact our engineers.

WARNING	❖ Do not stand on the product or put heavy objects on it. ❖ Do not block the vent or put foreign objects into it. ❖ Please ensure the controller is fixed on the base. ❖ Do not pull the connector violently or twist the electric wires excessively. ❖ Do not frequently switch the power switch and the control button. ❖ Please ensure that the robot, the emergency stop switch and the controller are functioning properly before performing any work. ❖ Do not turn off the power switch during the operation. ❖ Do not open, modify, disassemble and maintain the machine without permission. ❖ The power must be disconnected when the machine does not operate in a long time.
CAUTION	❖ All operations must be executed by the trained staff. ❖ The controller must be kept away from high voltage or components that may generate electromagnetic field which will lead to robot malfunction or damage. ❖ When the robot is used to demonstrate, the operation speed should keep low and always keep an eye on the operating condition to prevent the workpiece from dropping or causing danger to operator. ❖ Do not turn off the power of the controller when modifying the program or parameter. Otherwise, the data stored in the controller will be damaged or lost.

3. Safety Notice

I. Safety Risk

i. Installation

- Ordinary Risk
  - ⦿ The installation procedures must follow this manual.
  - ⦿ The emergency stop switch must be installed in an appropriate location where it can be operated easily, so that the operator can immediately stop the robot system in an emergency.
  - ⦿ The person who installs the robot must be trained and authorized.
  - ⦿ Always follow the installation and safety requirements described in this manual to ensure personal safety.

- Risk without electric shock
  - ⦿ A safety area must be set outside the working range of the robot, and a safety device must be used to prevent the personnel entering without permission.
  - ⦿ After the brake of a servo motor is released, the robot will move due to the gravity and it may injure the operator.
  - ⦿ When installing or disassembling any mechanical parts, be aware of falling parts which may injure the operator.
  - ⦿ Be aware of high temperature produced by the controller.
  - ⦿ Do not allow any action of climbing on the robot.

ii. End effector

- ⦿ The end effector can be classified as two types:
  - A. Gripper: Used to load and unload, such as pneumatic gripper, electric gripper and vacuum sucker.
  - B. Tool: Used to process, such as welding, cutting and surface treatment.
- ⦿ The gripper-type end effector should prevent the workpiece from dropping or damaging when the robot experiences a power error or other errors. More attention should be paid at the design stage.
- ⦿ The end effector could be equipped with the control unit. The position must be noted to avoid the robot interference when the end effector is installed.

WARNING	❖ The tool-type end effector is usually equipped with high voltage, high temperature or active shaft. Special attention should be paid during the operation.

iii. Pneumatic and Hydraulic Systems

- ⦿ More attention should be paid to the pressure remained in the pneumatic and hydraulic systems after the power is disconnected.
- ⦿ The internal pressure must be released before the pneumatic and hydraulic systems are maintained.
- ⦿ When the pneumatic and hydraulic systems are operated, the clamped workpiece could drop owing to the insufficient pressure or gravity.

- The pneumatic and hydraulic systems must be equipped with the relief valve, so that the operator can be applied in an emergency.

WARNING	❖ More attention should be paid to the pressure in the pneumatic and hydraulic systems which are usually several times more than the atmosphere pressure.

iv. Risk caused by the working environment

- The industrial robots can be applied for the different industrial environments.
- All operating procedures must be specified by the professional evaluation and according to the industrial safety regulations.
- Maintenance must be conducted by the trained personnel who clearly understand the procedures for the whole system and other possible risks.
- When the operating procedures are interrupted, the special attention should be paid during the troubleshooting.

II. Emergency Stop

- Emergency Stop Definition
  - When the emergency stop is executed, the power supplied from the servo driver to the motor will be disconnected and all actions will be stopped.
  - If the procedures are recovered, the emergency stop switch should be reset.
  - Emergency stop established an immediate stop: Immediately stop the robot system, and disconnect the driver power.
  - When the emergency stop is executed and the heavy objects are loaded on the arm end, the shaft without brake will slip owing to gravity if the brake version without the whole shaft is applied. The attention must be paid for the object damage.
  - The emergency stop switch is used for emergency stop only.
  - Avoid using the emergency stop instead of the normal stop procedure to shut down the robot system. Otherwise, it may cause unnecessary damage to the robot system.
- Emergency Stop Switch
  - The *HIWIN* robot is equipped with two emergency stop switches, where one is installed on the teach pendant and the other is directly connected to the controller via the cable. If additional emergency stop switches are required, other connection can be applied for the same purpose.
  - Based on the relevant industrial safety regulations, the emergency stop switch is directly connected to the controller of the robot via the physical wires.

4. Warranty Terms and Conditions

The period of warranty shall commence at the received date of HIWIN product (hereafter called “product”) and shall cover a period of 12 months. The warranty does not cover any of the damage and failure resulting from:

- The damage caused by using with the production line or the peripheral equipment not constructed by HIWIN.
- Operating method, environment and storage specifications not specifically recommended in the product manual.
- The damage caused by changing installation place, changing working environment, or improper transfer after being installed by the professional installer.
- Product or peripheral equipment damaged due to collision or accident caused by improper operation or test by the unauthorized staff.
- Installing non-genuine HIWIN products.

The following conditions are not covered by the warranty:

- Product serial number or date of manufacture (month and year) cannot be verified.
- Using non-genuine HIWIN products.
- Adding or removing any components into/out the product without authorized.
- Any modification of the wiring and the cable of the product.
- Any modification of the appearance of the product; removal of the components inside the product. e.g., removal of the cover, product drilling or cutting.
- Damage caused by any natural disaster. i.e., fire, earthquake, tsunami, lightning, windstorms, floods, tornado, typhoon and hurricane etc.

HIWIN does not provide any warranty or compensation to all the damage caused by above-mentioned circumstances unless the user can prove that the product is defective.

For more information towards warranty terms and conditions, please contact the technician or the dealer who you purchased with.

WARNING	❖ Improper modification or disassemble the robot might reduce the robot function, stability or lifespan. ❖ The end-effector or the cable for devices should be installed and designed by a professional staff to avoid damaging the robot or robot malfunction. ❖ Please contact the technical support for special modification coming from production line set up. ❖ For the safety reason, any modification for HIWIN product is strictly prohibited.

Content

~~版本更新內容~~ Version Update

Edition	Date	Applicable scope	Remark
5.0.1	2016.05.09	RCD series	Added shut down procedure description
6.0.0	2016.07.04	RCD series	Modified partial contents; added CH5.
6.0.1	2016.07.26	RCD series	Modified the name of CN10 pin and connection diagrams.
6.0.2	2016.09.05	RCD series	Modified partial contents
6.0.3	2017.01.18	RCD series	1. Modified standard and optional specifications 2. Remove external button option 3. Remove RS232 output
6.0.4	2017.05.08	RCD series	1. Remove external button label 2. Add emergency stop connection description 3. Add warranty terms and conditions
6.0.5	2018.01.16	RCD series	Modified specification table: remove RS232, add current leakage
6.0.6	2018.03.05	RCD series	1. Modified specification table: encoder, relative humidity 2. Modified encoder connection example 3. Modified standard and optional table 4. Add 3.2 warning sign
6.0.7	2018.09.10	RCD series	1. Modified Chp. 3.3 2. Add Chp. 6 UPS battery maintenance

1. Specifications

1.1 Standard Specifications

The following table shows the standard specifications of the robot controller.

Item		***HIWIN*** Robot Controller	
Model No.		RCD401	RCD403
Controlled Axis		4	
Positioning control		PTP(point-to-point) CP(continuous path)	
Joint control		AC servo control	
Operating system		HRSS	
Memory capacity	Fix point	5000	
	Step number	10000	
Teaching method		Teach pendant	
Communication interface	Ethernet	1	
	USB	2	
External I/O	Safety I/O	Input：1 Output：1(Note 1)	
	Function I/O	Input：8 Output：8	
	Digital I/O	Input：16 Output：16	
	Encoder Input	4 Channels	
Power	Input power range (VAC)	Single-phase 200-240	
	Power capacity (KVA)	3.3	4.4
	Power frequency(Hz)	50/60	
	Voltage drop (msec)	10 or less	
	Rating output current (A)	15	20
	Current leakage (mA)	30	
Appearance dimension (mm^3)		430W×460D×275H	
Weight (kg)		30	
IP grade		20	
Temperature range for workplaces (℃)		0~40	
Relative humidity (%RH)		20~75(non-condensing)	
Grounding		Below 100Ω	

*Note 1: A set of monitoring point are provided for external security. A set of open contact is provided to determine the robot is in the safe state.

1.2 Standard and Optional Specifications

The following table shows the items of the standard equipment for the robot controller.

Item	HIWIN Part No.	Remark
CN2, Motor Power Signal Cable 5M	AH300X01	Refer to CH2.4
Connector Accessory Kit	4C201EV1	Refer to CH 2.5 and CH3

The following table shows the items of robot controller optional equipment.

Item	HIWIN Part No.	Remark
CN2, Motor Power Signal Cable 10M	AH301V01	Refer to CH2.4
Teach Pendant	AH300U01	Refer to CH 4
CN3 Emergency Stop Switch Unit 5M	4C7013F2	Refer to CH 2.5
CN10 Function I/O Cable	4C201EQ1	Refer to CH 3
CN5 Digital I/O Cable	4C201ER1	Refer to CH 3
CN7 Encoder Input Cable	4C201ET1	Refer to CH 3
Dedicated Encoder for Conveyor Tracking Function	462B00C7	Refer to CH 3

1.3 Appearance Dimensions

The following shows the appearance dimensions of the robot controller (Unit: mm)

Front view of controller

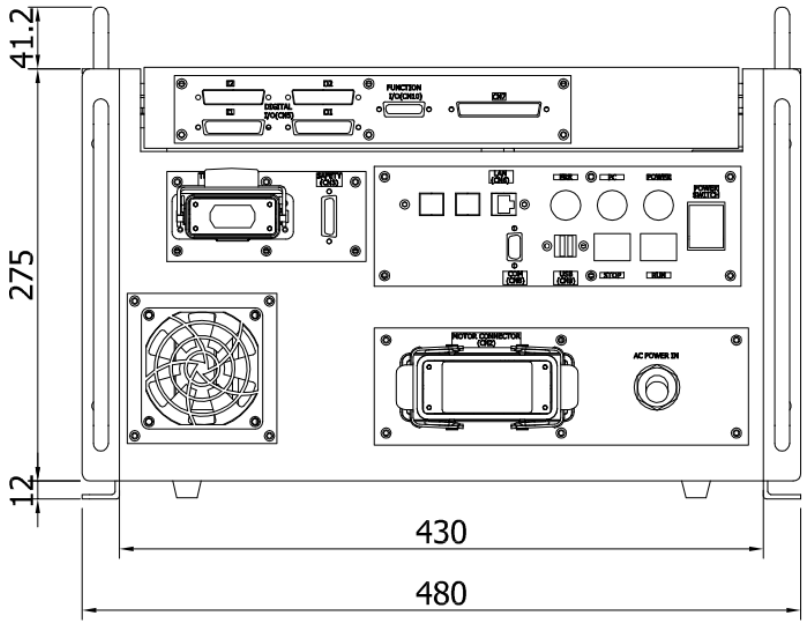

Front view of controller

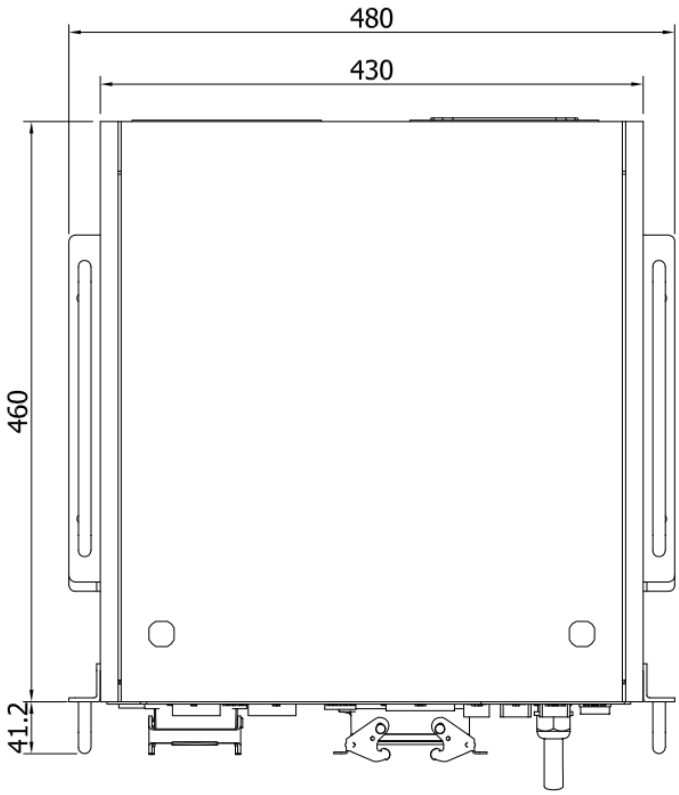

1.4 Installation Dimensions

The following shows the connector installation space. Please reserve some space for the connecting wires to avoid interference as they bend. (Unit: mm)

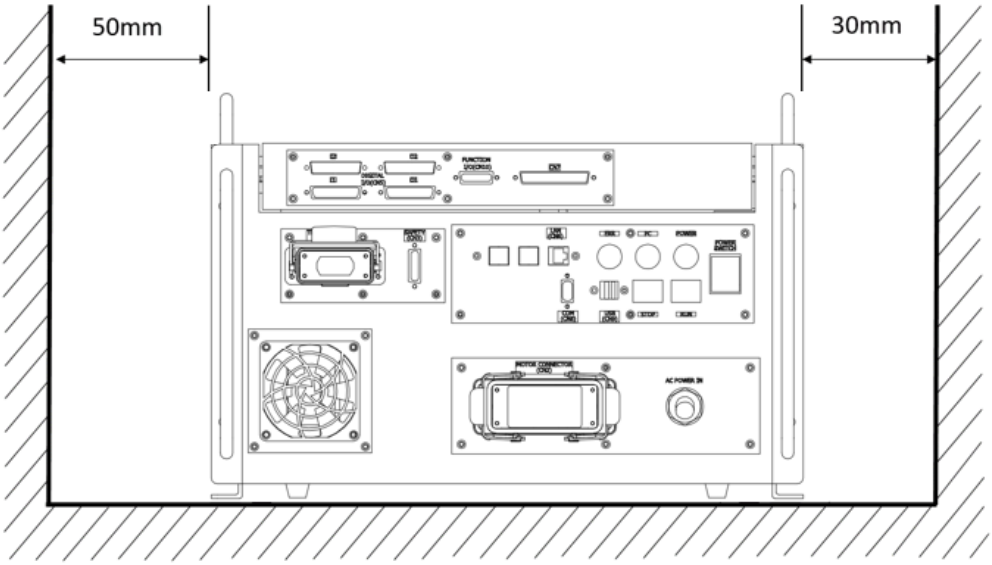

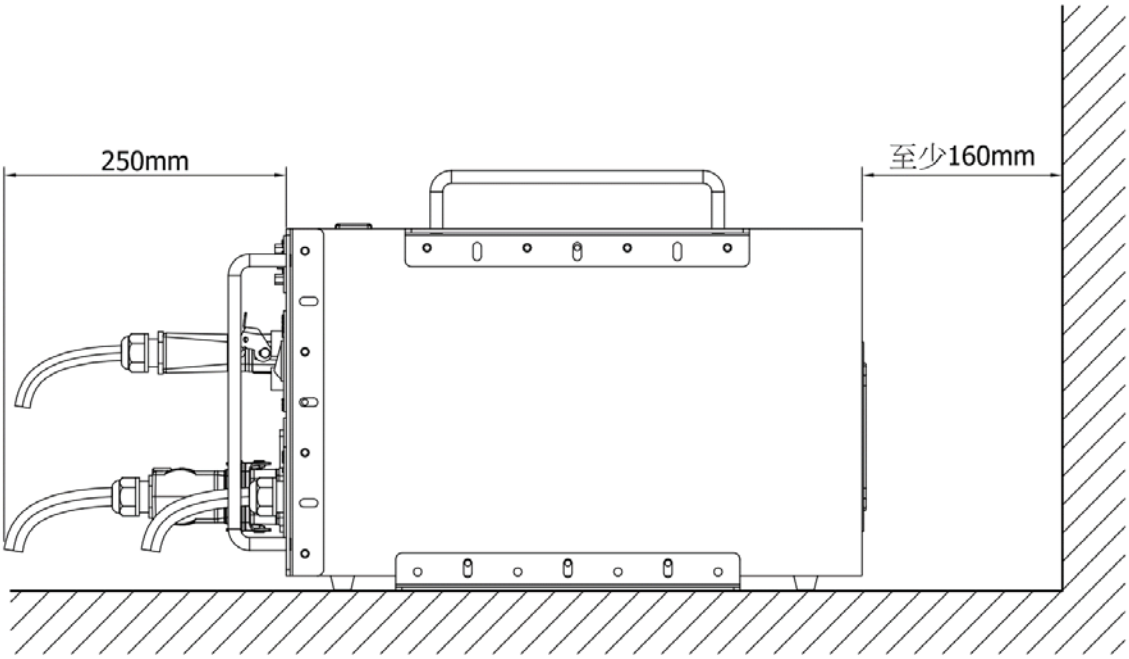

CAUTION	❖ Controller should keep upright while installing as the illustration shows. Flipping it 90 degrees on the side and turning it over 180 degrees are forbidden while installing the controller. This is to protect the internal battery component.

1.5 Operating Environment

The robot controller employs the IEC protection rating as IP20 (open). In addition, IP20 indicates the protection rating for the solid, not for grease and water.
IEC specification of IP20:
When a 12mm diameter iron ball enters the test machine with an external force of 3.1kg±10%, it will not pass through the protection level of the opening.

WARNING	❖ The controller should not be placed at the environment with moisture, with high temperature, under direct sunlight or potentially explosive environment. ❖ Please keep the controller away from the strong electric field or the magnetic field. ❖ There are two radiator at the back of the controller, therefore please leave at least 160mm space for cooling. ❖ Because the vents are set on the left side of the controller, please ensure a space of 50mm from the left. ❖ Please place the controller at flat surface, and avoid shaking. ❖ Please fix the controller firmly and make sure the screws are secure.

1.6 Sticker and Label

The following shows the appearance stickers and labels on the robot controller.

Front View

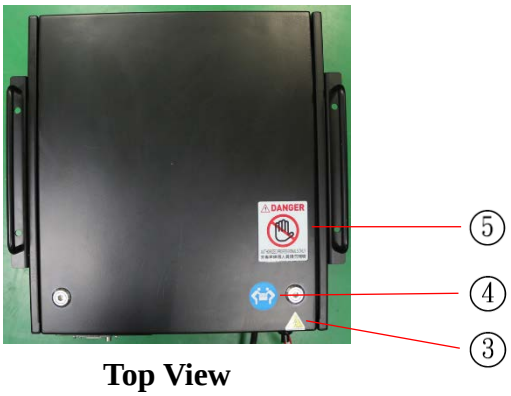

Top View

Sticker No.	Illustration	Description
1	HIWIN Robot Controller MODEL : RCD403 SERIAL NO. : RCD403150010 MANUFACTURED : 2015.05 SUPPLY VOLTAGE : SINGLE PHASE 200-240 VAC RATED CURRENT : 15A FREQUENCY : 50/60HZ WEIGHT : 30kg SIZE : 460(D)X430(W)X275(H) PROTECTION CLASS : IP20 V1.6 MADE IN TAIWAN NO.7 JINGKE Rd.,TAICHUNG PRECISION MACHINERY PARK,TAICHUNG 40852,TAIWAN	Specification mark
2	切勿帶電狀態下插拔 Do not remove Teach Pendant when the power is turned on.	Turn off the main power before removing Teach Pendant
3	BEWARE OF ELECTRIC SHOCK	Beware of electric shock
4		Transport by multiple people
5	DANGER AUTHORIZED PROFESSIONALS ONLY 非專業維護人員請勿開啓	Danger: Authorized professionals only

2. Installation

2.1 Name and Function of Controller Component

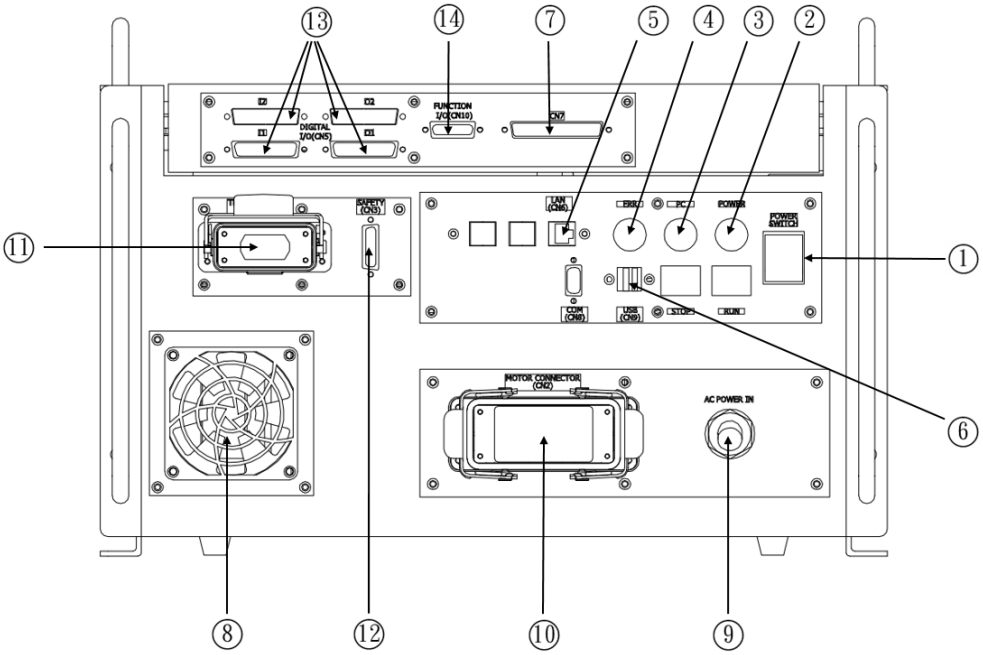

No.	Name	Description
1	Power switch	Power ON/OFF
2	Power indicator	Connection state of controller power
3	PC power indicator	Display power ON/OFF, and control the start
4	Error indicator	Display whether the controller is abnormal
5	LAN connector (CN6)	Ethernet signal transmitting
6	USB connector (CN9)	USB signal transmitting
7	Encoder input connector (CN7)	Encoder signal transmitting
8	Fan inlet	Inlet for controller fan
9	Main power connector (CN1)	Controller power input
10	Motor connector (CN2)	Connector to connect the robot
11	Teach Pendant connector (CN4)	Teach Pendant signal transmitting
12	Safety connector (CN3)	Connector to external emergency stop button
13	Digital I/O connector (CN5)	Connector to transmit Digital I/O signal
14	Function I/O connector (CN10)	Connector to transmit Function I/O signal

2.2 Connection of Main Power

The following figure shows the example to connect the main power. The controller must be supplied with single-phase 200-240V. The ground wire should be separated from the main power breaker, and indeed grounded.

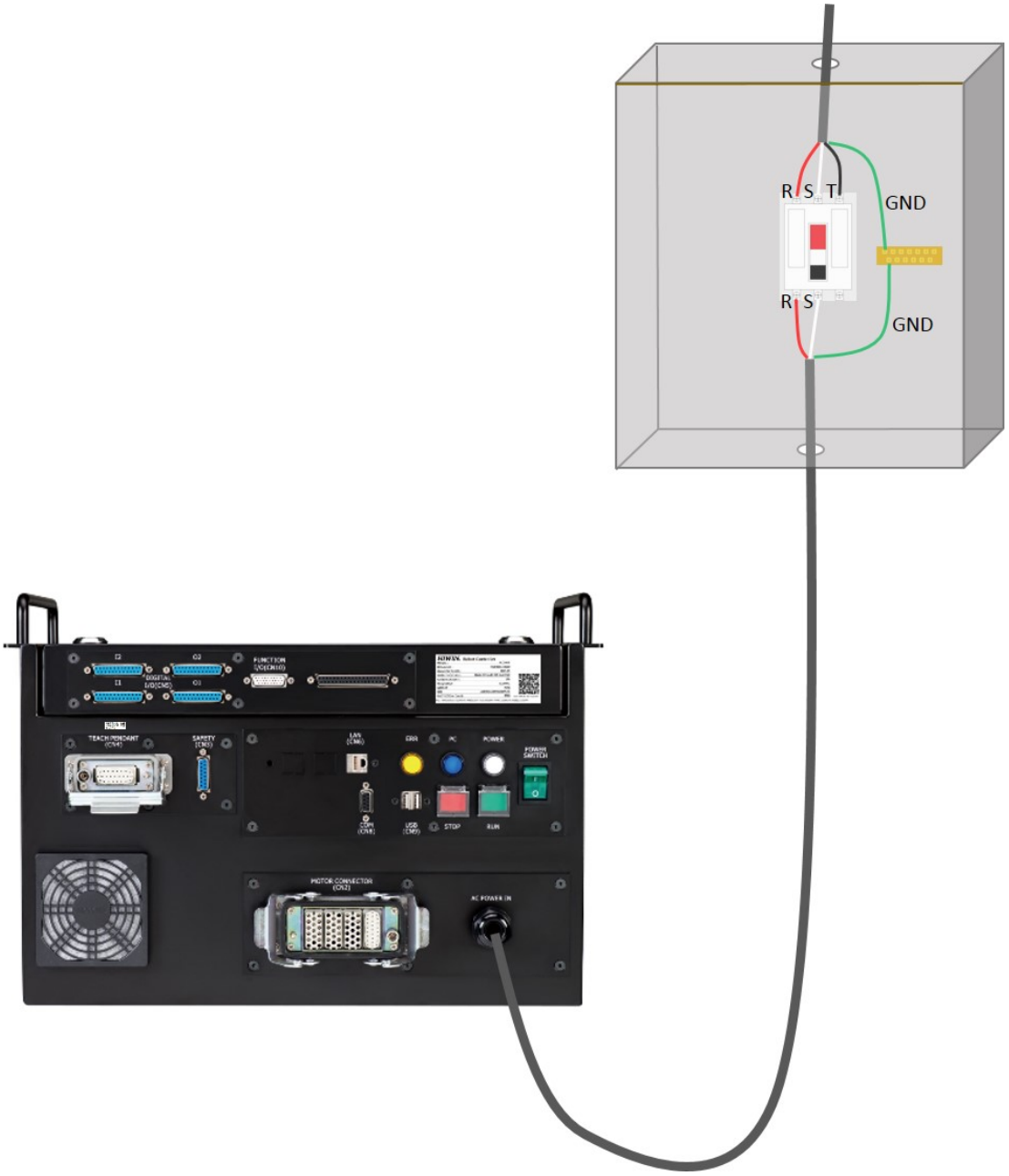

2.3 Controller Shut Down Procedure

Name	Photo	Description
Power Switch		Controller ON: After the power is connected, turn the power switch to state “ | ”. Controller OFF: (1) Operate the robot to a safe posture, and then stop the motion. (2) Press the emergency stop button. (3) Turn the power switch on the controller panel to state “O”. (4) Before cutting off the power, make sure the controller is entirely turned off.

WARNING	❖ Please stop the robot and press the emergency stop button before turning it off. Directly cut off the power while robot is moving may cause an unexpected danger.

2.4 Motor Connector

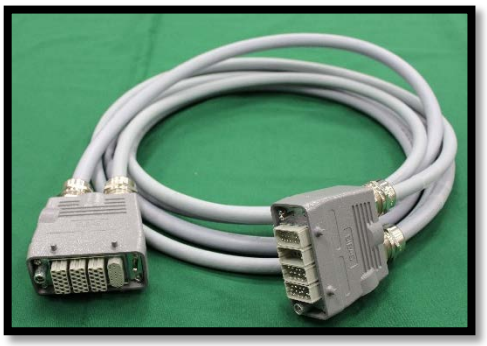

Description:

Power and signal cable that connect the robot with the controller (CN2).

Connection:

The motor connector for the controller is CN2 connector. Please outwardly unlock the safety lock, and connect the motor power signal cable. This connector is designed with fail-safe. If it can't be connected, please rotate and connect it.	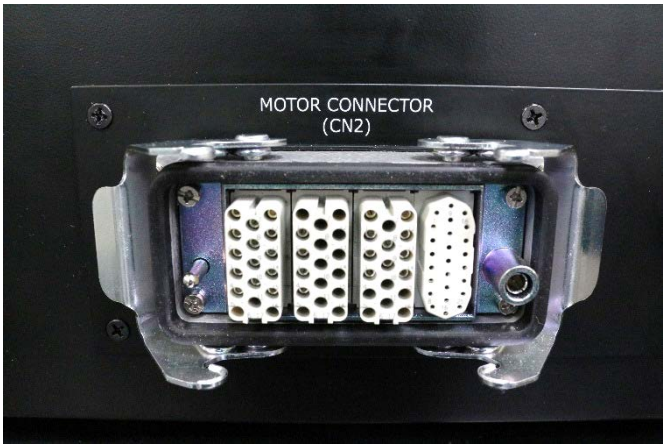
The motor power signal cable is connected to CN2 connector, and the safety lock is secured.	

2.5 Connection of Emergency Stop Switch

Description:

The emergency stop connector is D-SUB 15P for standard accessory. The Emergency Stop Switch set includes the Emergency Stop button and connectors for your option.

Wiring diagram for Emergency Stop Switch

: Need to supply the external power

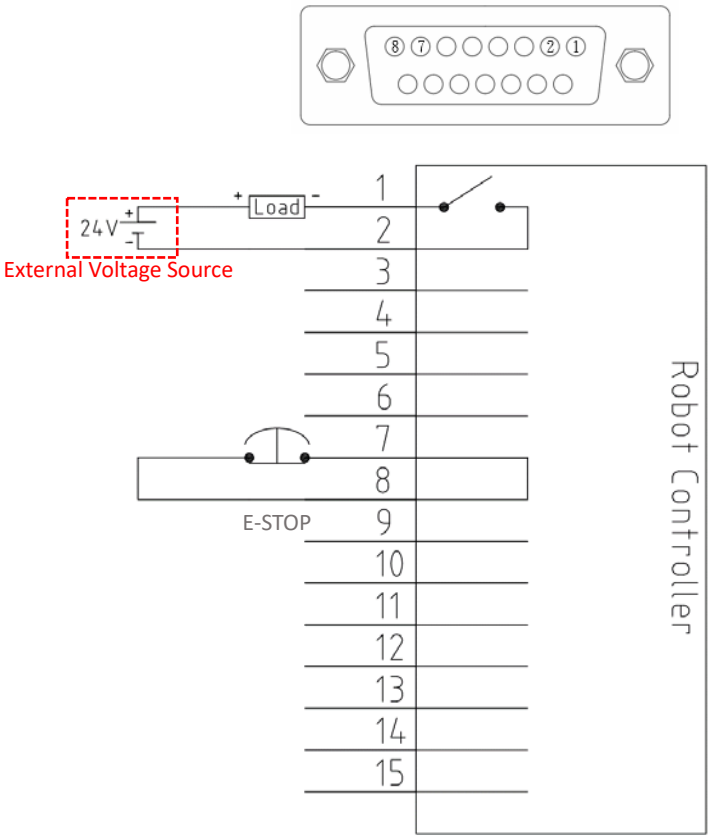

Remark: The pin 7 and 8 on the Emergency Stop Switch are normally short-circuited; if the pin is open-circuited, it will trigger the emergency stop signal.

CAUTION	❖ Please secure the emergency stop connector or the Emergency Stop Switch. ❖ When using the emergency stop connector, please ensure the contacts are firmly connected.

	❖ The maximum permissible current for the contact is 6A ❖ If short-circuited is required for pin 7 and 8, please use D-SUB 15P connector, short-circuited the wire directly is forbidden. ❖ The external device connected to the emergency stop switch circuit should be dry contact (uncharged) switch, to prevent internal circuit from damaging.

Emergency Stop Connector:

Emergency stop connector is a standard accessory. The head of the connector consist of two plastic gasket. During assembling, the plastic gasket has to be placed between the screw iron plate and the outer shell of the connector as shown in the image below for complete assemble.

Connection:

The emergency stop connector for the controller is CN3 connector. Please remove the safety cover, and connect the connector. This connector is designed with fail-safe. If it can't be connected, please rotate and connect it.	 
The connector is connected to CN3 connector, and screws are secured.	 
Please ensure the Emergency Stop Buckle is in the reset state before the robot runs.	

DANGER	❖ The Emergency Stop Switch must be located at the reachable position. When the robot runs incorrectly, it must be immediately stopped for the safety.

CAUTION	❖ Before the robot runs, please ensure this Emergency Stop Switch and the Emergency Stop Switch on the Teach Pendant are in the reset state.

3. External I/O

There are three types of external I/O for this controller:

(1) Function I/O → special function I/O

(2) Digital I/O → configuration of external I/O by user

(3) Encoder I/O → input by external encoder

3.1 Function I/O

Description:

This cable is a connection cable for Function I/O (CN10), which is used to connect the connector to the robot. There are eight input contacts and eight output contacts in a set.

Overview of Function I/O

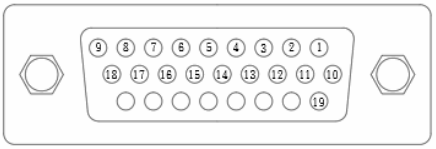

Input			Output		
Pin	**Parameter Name**	**Function**	**Pin**	**Parameter Name**	**Function**
1	START	Execute program	10	RUN	Signal output when running program
2	HOLD	Hold program	11	HELD	Signal output when holding program
3	STOP	Stop program	12	FAULT	Fault signal output from controller
4	ENBL	Need to enable this input when you want to use Function I/O.	13	READY	Controller ready to complete
5	RSR1/PNS1	Robot request 1/procedure selection 1	14	ACK1/SNO1	RSR 1 feedback signal/select the program No.1
6	RSR2/PNS2	Robot request 2/procedure selection 2	15	ACK2/SNO2	RSR 2 feedback signal/select the program No.2
7	RSR3/PNS3	Robot request 3/procedure selection 3	16	ACK3/SNO3	RSR 3 feedback signal/select the program No.3
8	RSR4/PNS4	Robot request 4/procedure selection 4	17	ACK4/SNO4	RSR 4 feedback signal/select the program No. 4
9	FICOM1	Common input	18	FOPWR1	External power input 24V(Note1)
			19	FOGND1	External power input 0V(Note 1)

*Note 1: When function output is used, a set of external power input will be needed and the output is the NPN mode.

Wiring diagram for Function I/O (CN10)

: Need to supply the external power

INPUT : NPN
OUTPUT :NPN

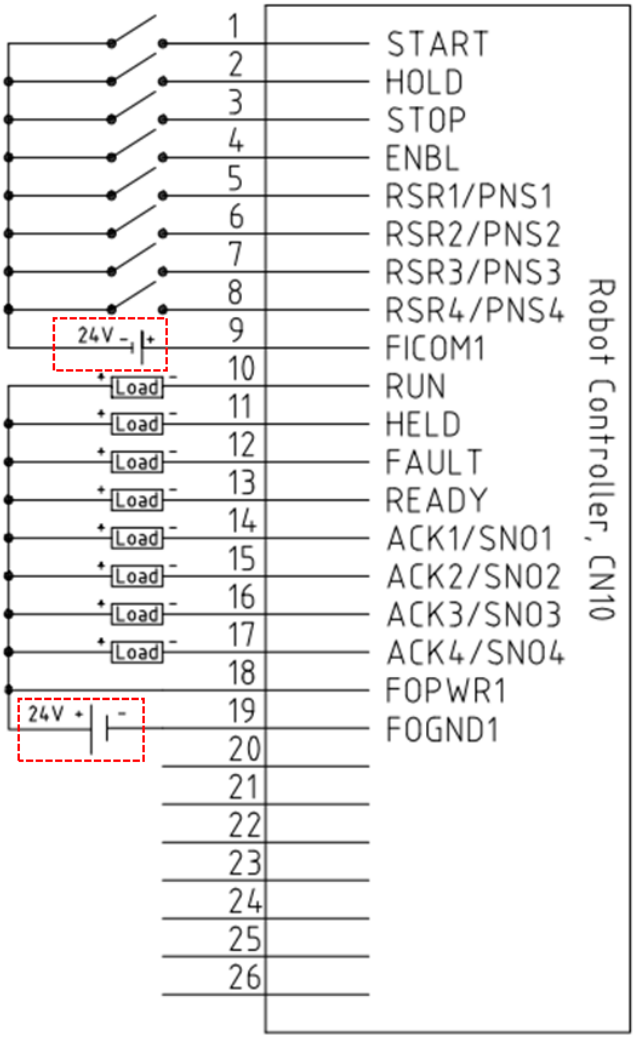

INPUT : NPN
OUTPUT :NPN

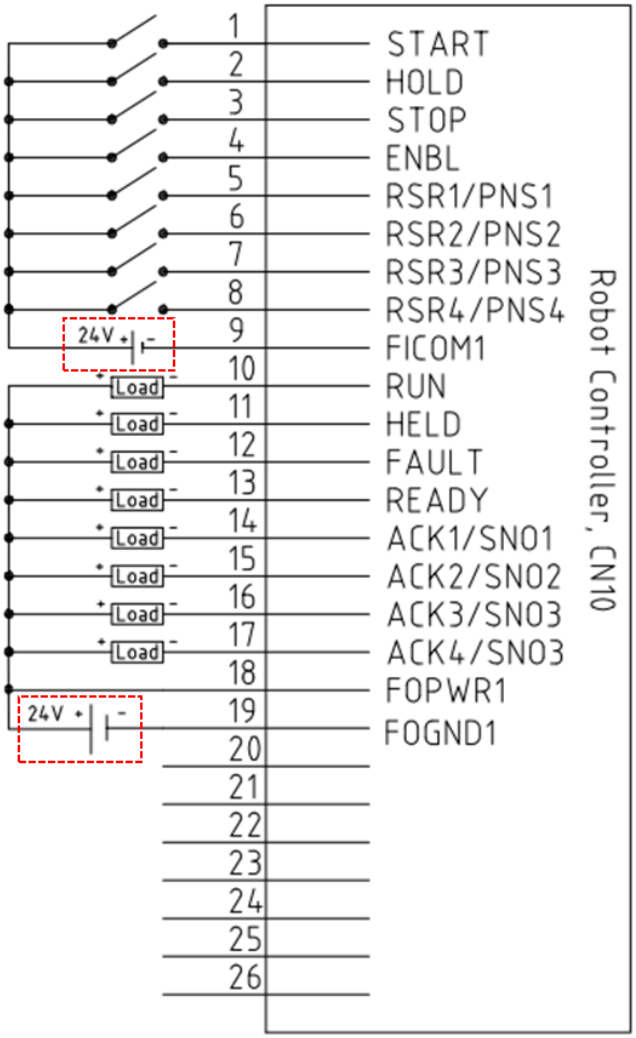

Remark: The output only supports the NPN mode.

3.2 Digital I/O

Description:

The connection set of Digital I/O includes a cable and a terminal. This cable is used for the connection of Digital I/O and the controller (CN5 connector), corresponding to 16 inputs or outputs. Therefore, two sets are needed if a set is used to correspond to output and input.

Overview of Digital I/O

There are 16 contacts for Digital I/O, as shown in the following table:

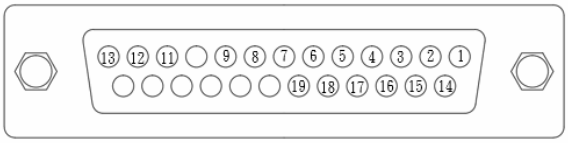

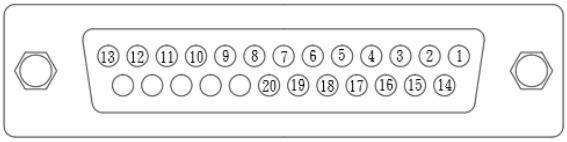

Input				Output			
Pin	**Parameter Name**	**Pin**	**Parameter Name**	**Pin**	**Parameter Name**	**Pin**	**Parameter Name**
1	DI[1]	11	DI[9]	1	DO[1]	11	DO[9]
2	DI[2]	12	DI[10]	2	DO[2]	12	DO[10]
3	DI[3]	13	DI[11]	3	DO[3]	13	DO[11]
4	DI[4]	14	DI[12]	4	DO[4]	14	DO[12]
5	DI[5]	15	DI[13]	5	DO[5]	15	DO[13]
6	DI[6]	16	DI[14]	6	DO[6]	16	DO[14]
7	DI[7]	17	DI[15]	7	DO[7]	17	DO[15]
8	DI[8]	18	DI[16]	8	DO[8]	18	DO[16]
9	DICOM1(Note 1)	19	DICOM2(Note 1)	9	DOGND1(Note 2)	19	DOPWR2(Note 2)
				10	DOPWR1(Note 2)	20	DOGND2(Note 2)

*Note 1: The common point of DI[1]~DI8 is DICOM1, and that for DI[9]~Dip[16] is DICOM2.

*Note 2: The common power of DO[1]~DO[8] is DOPWR1 and DOGND1, and that for DO[9]~DO[16] is DOPWR2 and DOGND2. A set of external power is needed when it is used. The output is the NPN mode.

WARNING	❖ I1, 01 used the same connector specifications, reinstall after disassembly cannot be reversed, this is to prevent damage to the internal components.

CAUTION	❖ The current for each input contact is needed to supply at least 10mA ❖ The maximum output current at a single point is 100mA

Wiring diagram for Digital input

There are 16 contacts for Digital Input, which the wiring diagram is as shown in the figure below:

: Need to supply external power

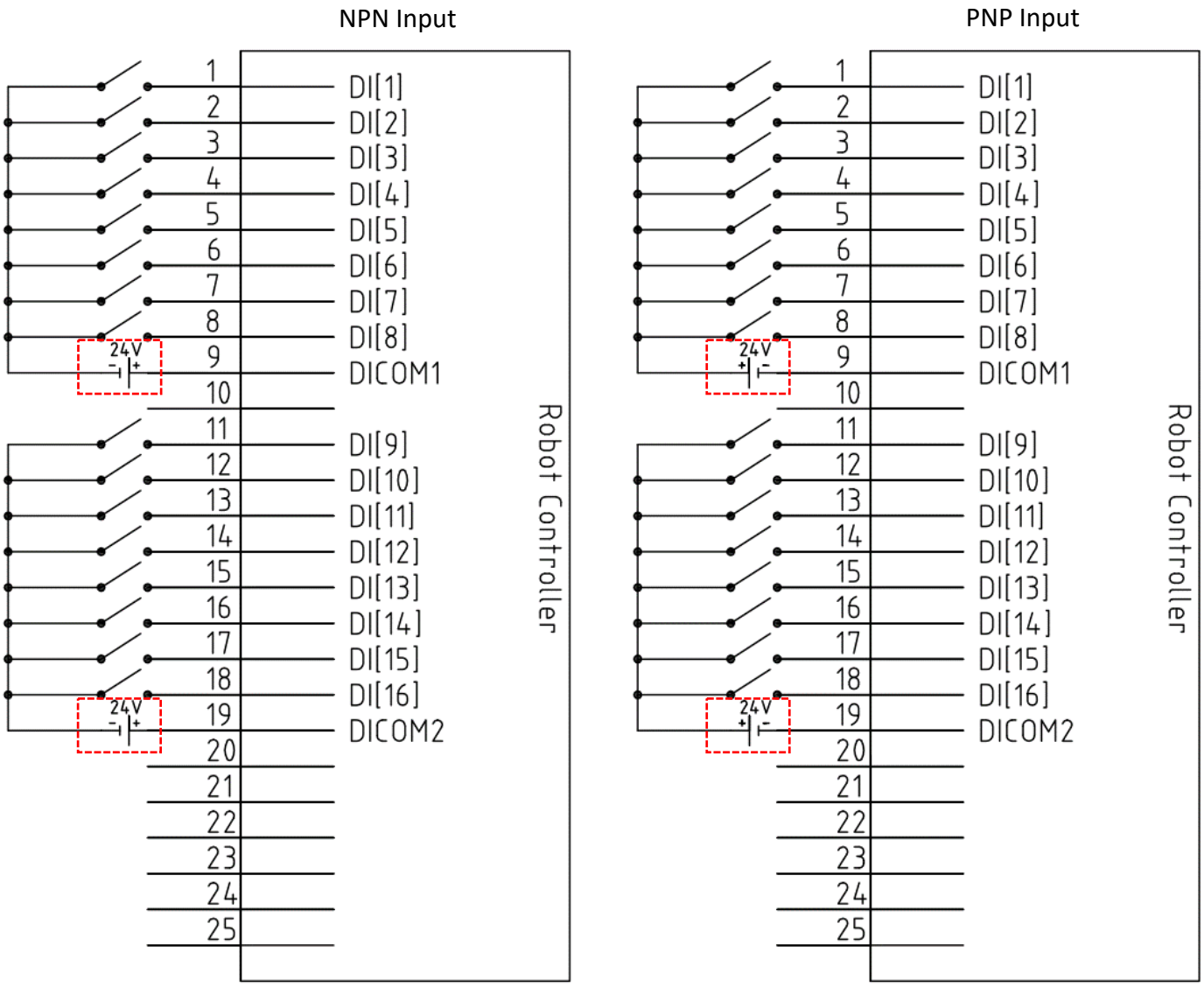

CAUTION	The current for each input contact is needed to supply at least 10mA.

Wiring diagram for Digital Output

There are 16 contacts for Digital Input, which the wiring diagram is as shown in the figure below:

: Need to supply the external power

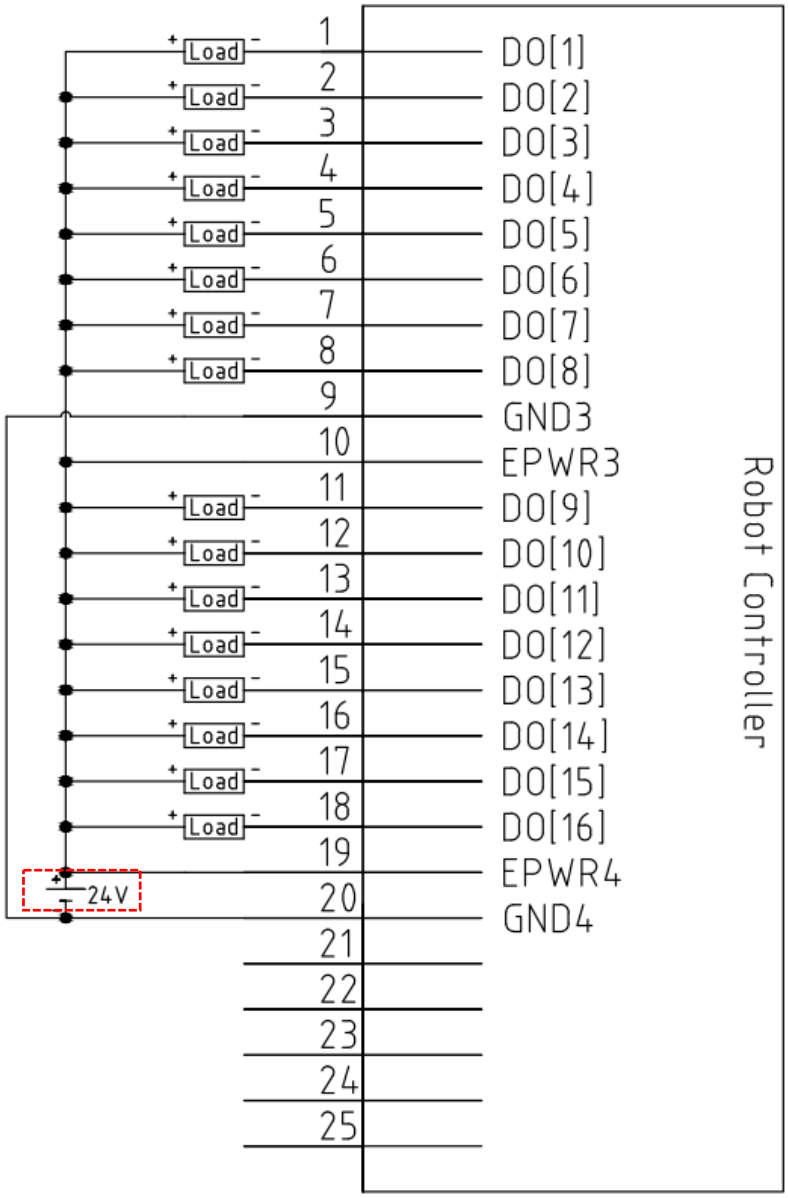

Remark: The output only supports the NPN mode

CAUTION	❖ The Maximum output current at single point is 100 mA.

Connection:

The connection end of Digital I/O for the controller is CN5 connector. Please remove the safety cover, and connect the connector. This connector is designed with fail-safe. If it can't be connected, please rotate and connect it.	
The connector is connected to CN5 connector, and secure with screws.	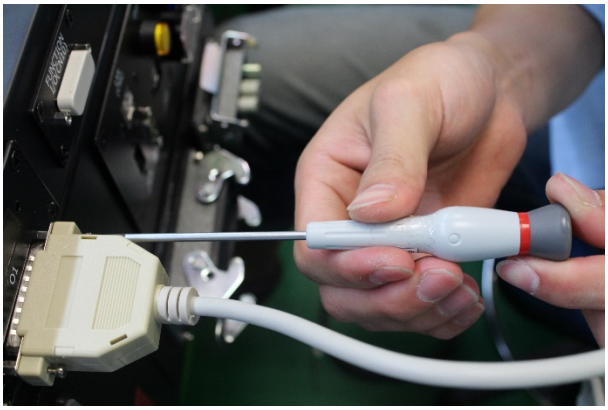

WARNING	❖ To prevent the internal component form damage, any wiring operation must be done only when the controller is disconnected.

CAUTION	❖ Please make sure the screws on the connector are secured.

3.3 Encoder Socket

Description:

There are four channels in the encoder, Ch1~CH4, the channel Latch signals are IDI1~IDI4. IDICOM can change the input to NPN or PNP according to operation.

Overview of Encoder Input

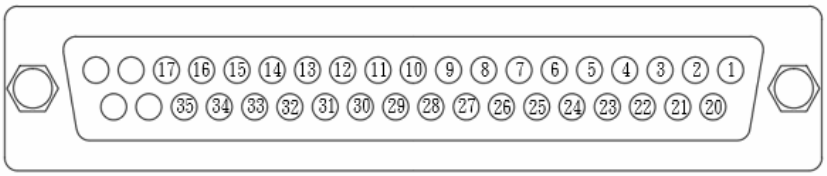

Pin	Parameter	Pin	Parameter
1	GND	20	CH1A-
2	CH1A+	21	CH1B-
3	CH1B+	22	CH1Z-
4	CH1Z+	23	CH2A-
5	CH2A+	24	CH2B-
6	CH2B+	25	CH2Z-
7	CH2Z+	26	CH3A-
8	CH3A+	27	CH3B-
9	CH3B+	28	CH3Z-
10	CH3Z+	29	CH4A-
11	CH4A+	30	CH4B-
12	CH4B+	31	CH4Z-
13	CH4Z+	32	GND
14	IDICOM	33	IDI 2
15	IDI 1	34	IDI 4
16	IDI 3	35	GND
17	GNG		

CAUTION	❖ The current for each input contact is needed to supply at least 5mA ❖ The maximum output current at single point is 50mA

Example of Actual Wiring

Take OMRON E6B2-CWZ1X as an example, the encoder required extra supply of 5V, CH1 as an input example.

Color	Terminal
Brown	Power supply($+V_{cc}$)
Blue	0V(common)
Black	Output phase A
White	Output phase B
Orange	Output phase Z
Black/red stripes	Output phase $\overline{A}$
White/red stripes	Output phase $\overline{B}$
Orange/red stripes	Output phase $\overline{Z}$

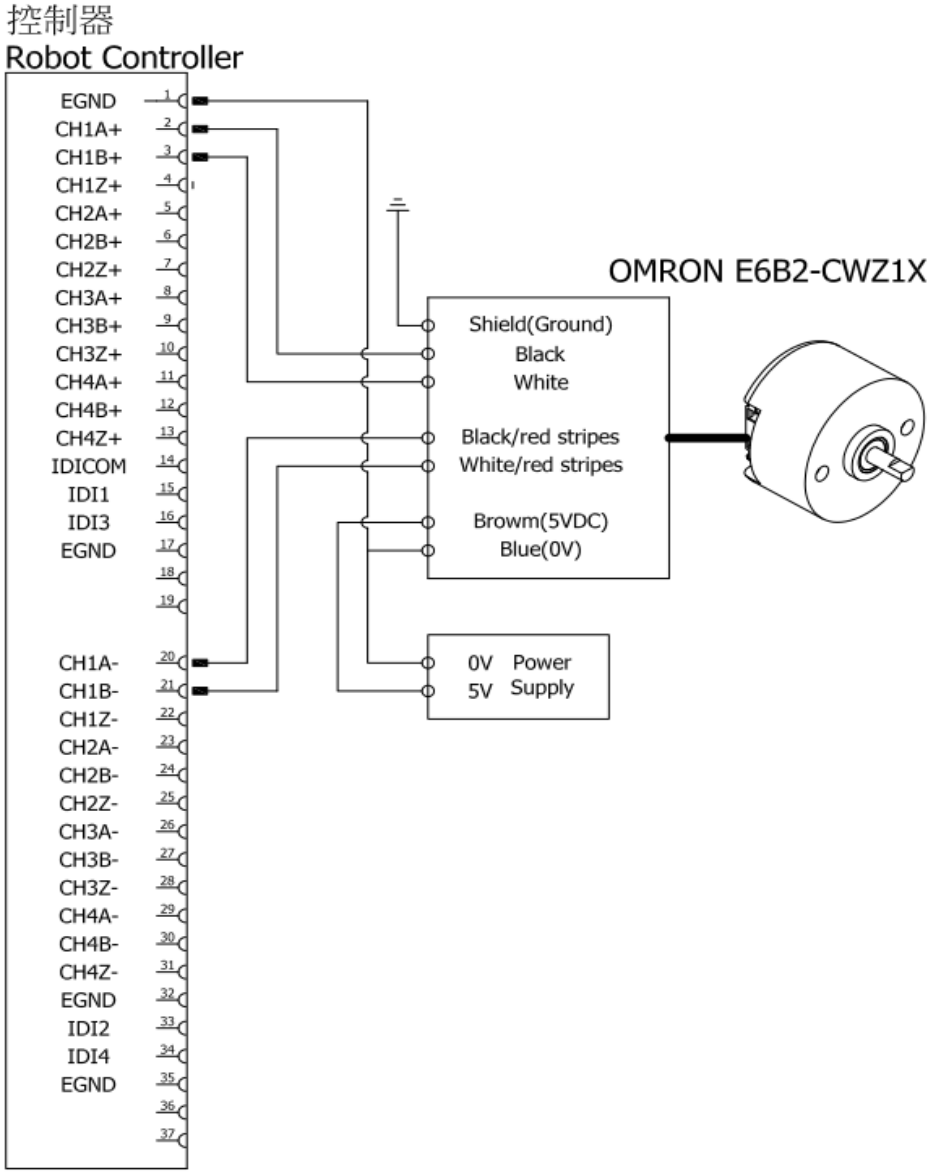

Connection:

The encoder socket for the controller is CN7 connector. Please connect the connector and indeed secure by screws. This connector is designed with fail-safe. If it can’t be connected, please rotate and connect it.	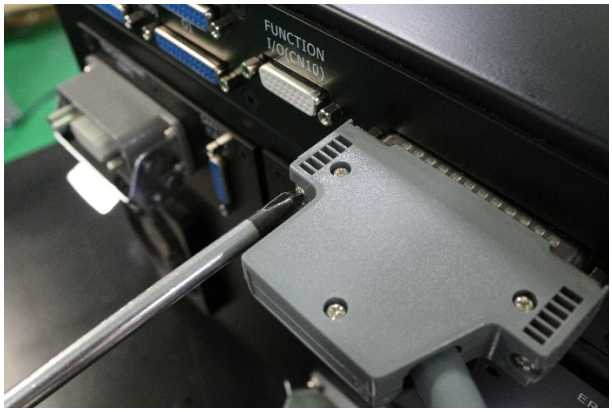

4. Teach Pendant

Description:

The Teach Pendant provides the program edit, program management and motion position teaching etc. In addition, for user's safety, the Teach Pendant is equipped with the Emergency Stop Switch and the Enable Switch (Note 1).

Specifications of Teaching Pendant:

Item	HIWIN Robot Teach Pendant
Model No.	TP02
Dimensions	318x245x107 mm^3
Weight	1.4kg
Protection Level	IP20
Display	10.2"touch screen
Resolution	1024x768 pixels
Mode	Manual, Auto and Lock
Physical Key	20 Keys + Enabling Switch + Emergency Stop Switch + Key Switch
Cable Length	5M

* Note 1: instruction on enable switch:

In T1 and T2 mode, the enable switch must be held at center position to start the robot. In Auto mode (AUT) and External Auto mode (EXT), the enable switch should be held at center position only in the moment it starts, and then release.

The Enable Switch has three positions:

(1) Not pressed→ The robot can't move.

(2) Center position→ The robot can move and teach

(3) Fully pressed→ The robot can't move.

In addition, the enable switch on both side has the same function.

⚠ WARNING	❖ The teach pendant may only be removed when the main power is disconnected (no power is supplied to the controller), the pendant does not support hot plugging.

	❖ It is forbidden to use Teach Pendant in the high dust concentration and high grease concentration environment since its protection rating is IP20. ❖ To ensure the Teach Pendant functions normally, any impact and fall are forbidden

Component Name and Function on Teaching Pendant

Front View

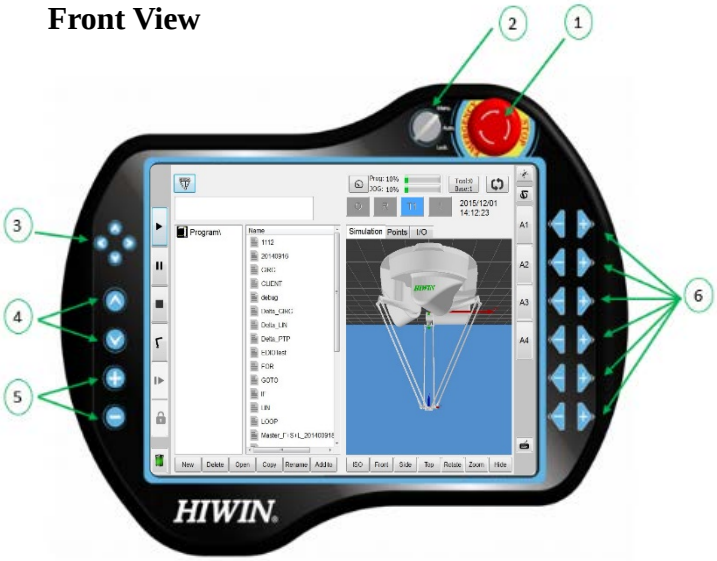

Rear View

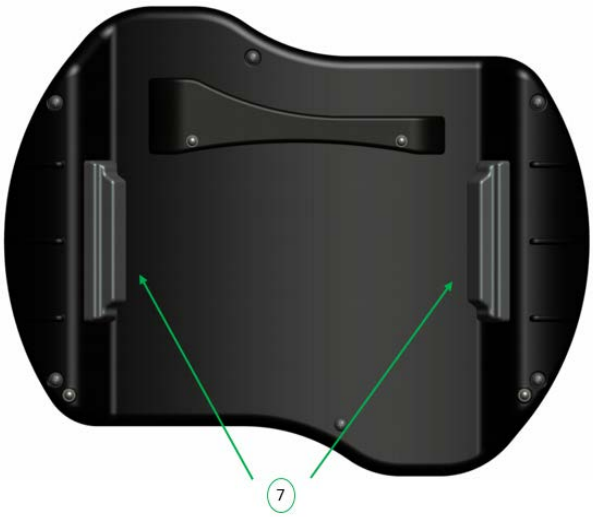

Function keys on Teach Pendant:

No.	Item	Function Description
1	Emergency Stop Switch	Disable servo and directly stop the robot.
2	Mode Switch	Switch mode among Manu, Auto and Lock
3	XY-Axis T1 Key	In the T1 mode, control the movement in XY-axis.
4	Z-Axis T1 Key	In the T1 mode, control the movement in Z-axis.
5	Speed Key	Adjust the robot speed
6	T1 Key	Adjust the value in each axis in the different mode.
7	Enable Switch	When pressing one of the switches, the robot can start to move; the robot will stop directly when releasing this switch or pressing it to the end.

5. Universal Stand

There are two sets of universal stand (shown in the figure below) when the controller is delivered. The stand can be installed on the controller with the handle, used for transportation or the controller can be fixed on other machines to be used. The stand and the handler are shown in the figure below. The M5 screws are used to tighten.

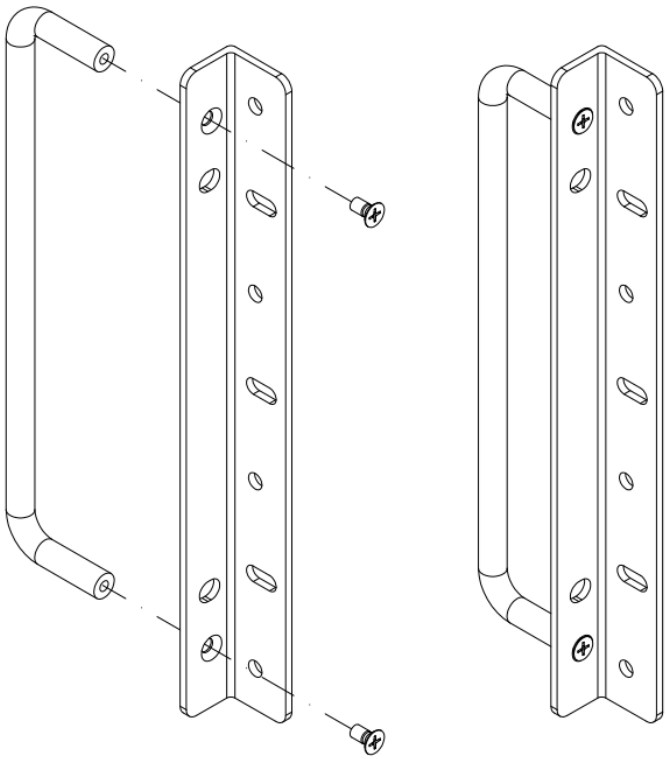

5.1 Universal Stand Installed on Controller

The universal stand can be assembled on the controller. The assembly figure is shown below. The elbow screws are used to tighten.

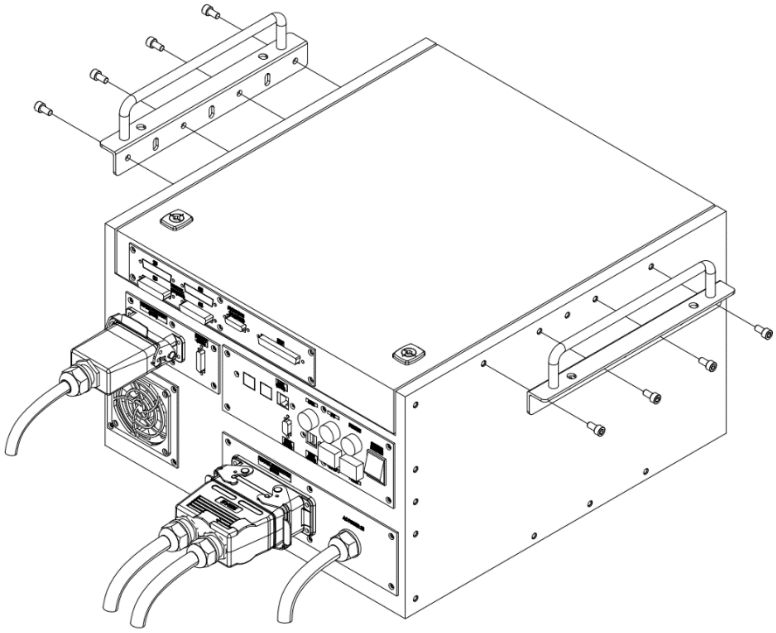

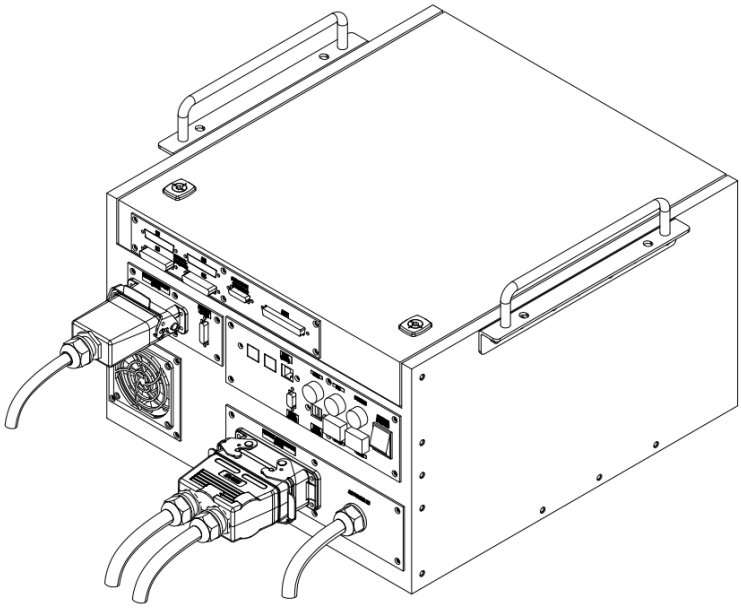

5.2 Universal Stand Installed at Front Side of Controller

The universal stand can be assembled at the front side of the controller. The assembly figure is shown below. The elbow screws are used to tighten.

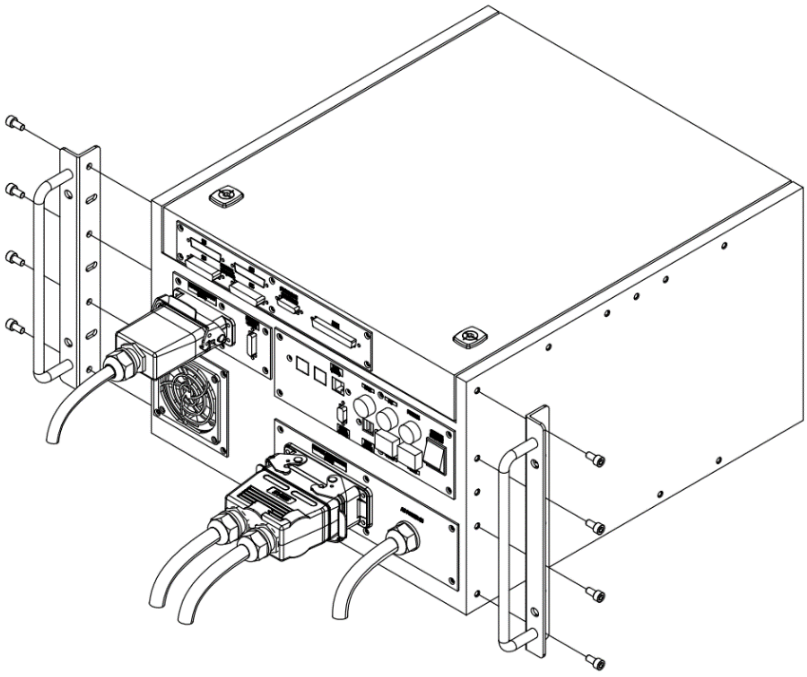

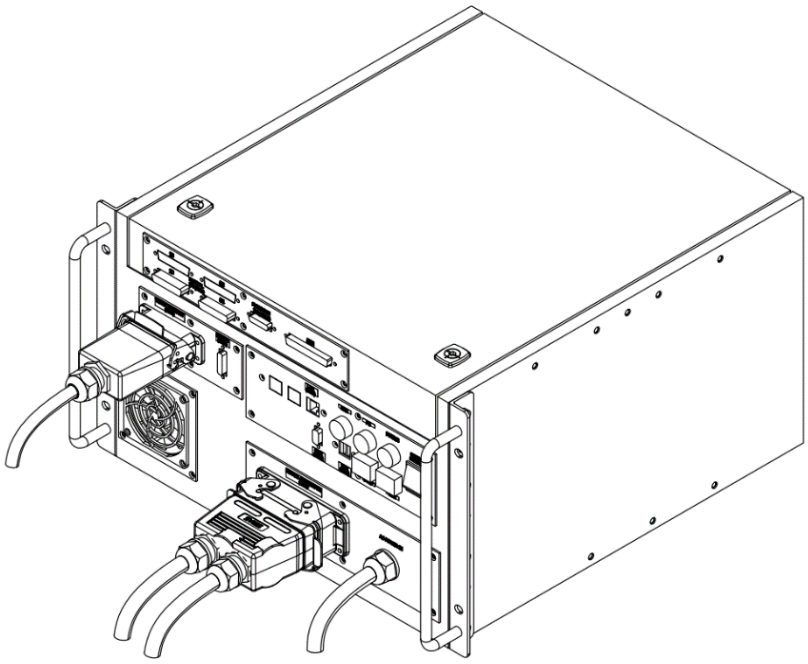

5.3 Universal Stand Installed under Controller

The universal stand can be assembled under the controller, where the assembly figure is shown below. The M6 screws are used to tighten. This configuration is convenient for the operator to fix the controller on the other machine. For the relative size of the mounting hole, please see the description of the following figure.

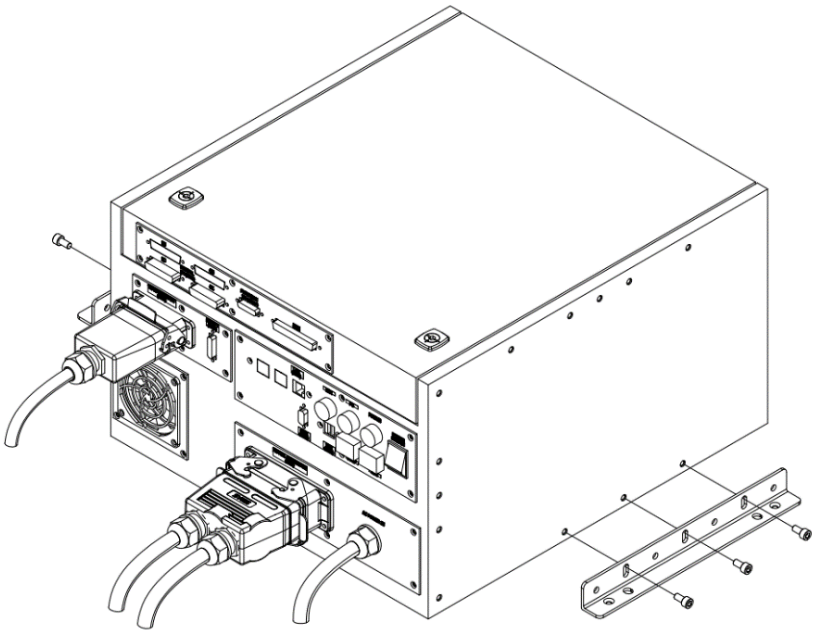

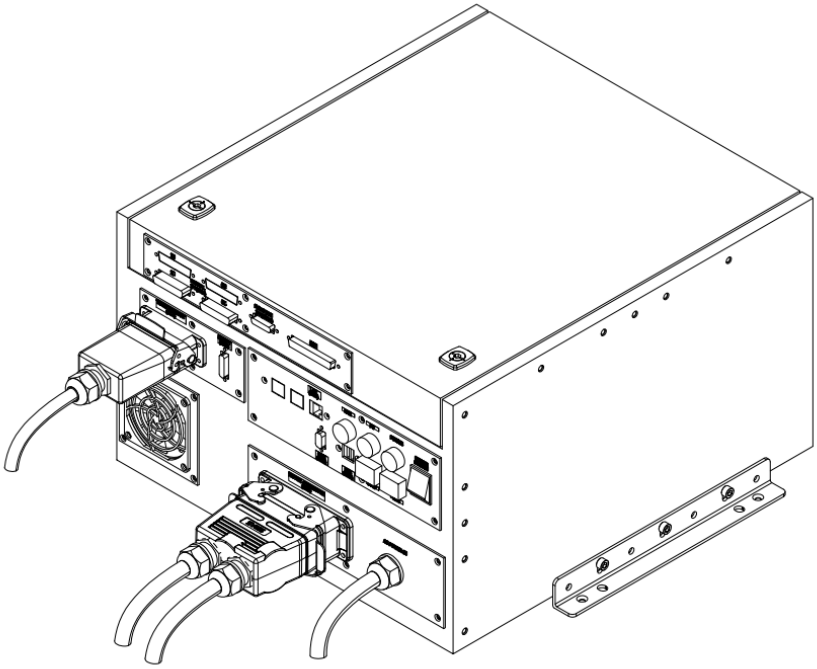

When the universal stand is combined with the robot controller and external machine, the relative positions of each mounting hole is shown in the following figure. Please tighten the controller and external machine with M6 screws.

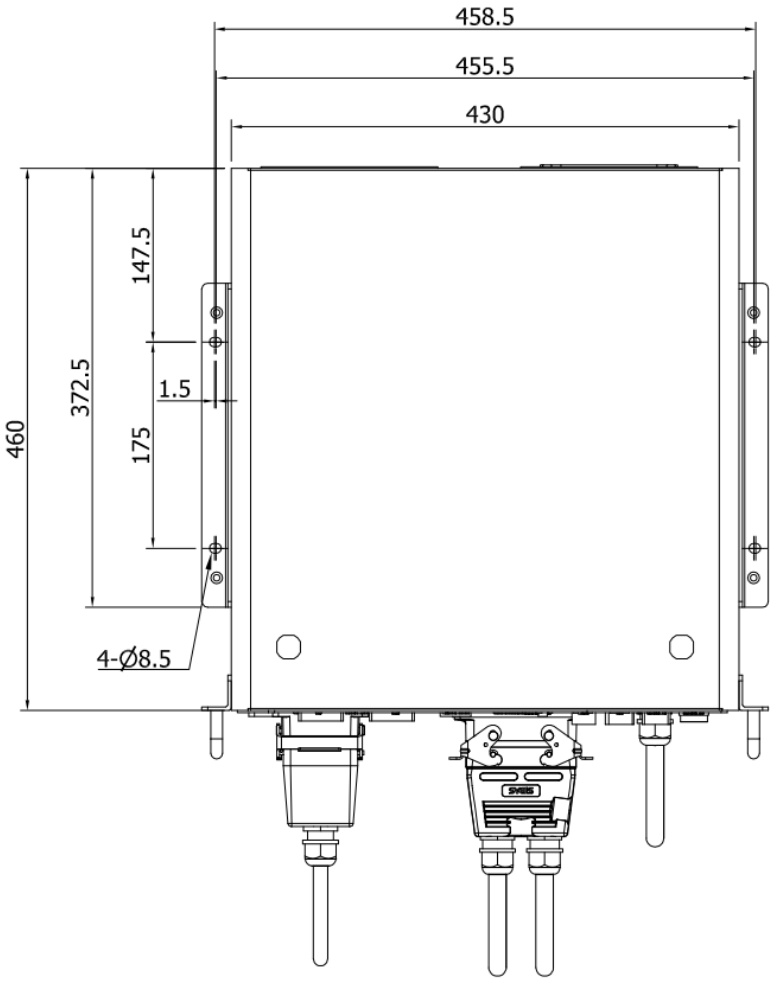

6. Maintenance

6.1 UPS Battery

The controller contains a battery, the battery is charged as:

(1) When first time power-on, the battery needs to be charged greater than 4HR. (Manipulator can be performed simultaneously)

(2) When it is in a low battery state (the UPS will produce around 2~3 beep sound for 1 second), the controller should be switched on more than 4HR for charging UPS.

(3) If the controller is idle for more than one month, please charge it more than 4HR

When the voltage of UPS is too low or due to malfunction causing the controller unable to reboot, please contact dealer or original manufacturer to replace the battery.

Note 1: If battery failed during warranty period, free replacement of battery will be provided.

Delta Robot Controller (Original Instruction) User Manual

Publication Date：September 2018, first edition

1. HIWIN is the registered trademark of HIWIN Technologies Corp.. For your protection; To avoid counterfeit products, be certain you are buying genuine HIWIN products before purchase.
2. Actual products may be different from the specifications and photos in this catalog. The differences in appearances or specifications may be caused by, among other things, product improvements.
3. HIWIN will not sell or export those techniques and products restricted under the "Foreign Trade Act" and relevant regulations. Any export of restricted products should be approved by competent authorities in accordance with relevant laws, and shall not be used to manufacture or develop nuclear, biochemical, missile and other military weapons.
4. HIWIN website for patented product directory: http://www.hiwin.tw/Products/Products_patents.aspx

HIWIN®
Motion Control and System Technology

Subsidiaries / Research Center

HIWIN GmbH
OFFENBURG, GERMANY
www.hiwin.de
www.hiwin.eu
info@hiwin.de

HIWIN JAPAN
KOBE · TOKYO · NAGOYA · NAGANO · TOHOKU · SHIZUOKA · HOKURIKU · HIROSHIMA · FUKUOKA · KUMAMOTO, JAPAN
www.hiwin.co.jp
info@hiwin.co.jp

HIWIN USA
CHICAGO · SILICON VALLEY, U.S.A.
www.hiwin.com
info@hiwin.com

HIWIN Srl
BRUGHERIO, ITALY
www.hiwin.it
info@hiwin.it

HIWIN Schweiz GmbH
JONA, SWITZERLAND
www.hiwin.ch
info@hiwin.ch

HIWIN s.r.o.
BRNO, CZECH REPUBLIC
www.hiwin.cz
info@hiwin.cz

HIWIN SINGAPORE
SINGAPORE
www.hiwin.sg
info@hiwin.sg

HIWIN KOREA
SUWON · MASAN, KOREA
www.hiwin.kr
info@hiwin.kr

HIWIN CHINA
SUZHOU, CHINA
www.hiwin.cn
info@hiwin.cn

Mega-Fabs Motion System, Ltd.
HAIFA, ISRAEL
www.mega-fabs.com
info@mega-fabs.com

HIWIN TECHNOLOGIES CORP.
No. 7, Jingke Road,
Taichung Precision Machinery Park,
Taichung 40852, Taiwan
Tel: +886-4-23594510
Fax: +886-4-23594420
www.hiwin.tw
business@hiwin.tw

The specifications in this catalog are subject to change without notification.

©2018 FORM C05UE101-1809 (PRINTED IN TAIWAN)